SIDES	BOTTOM

Material:Steel-0.0625″-G60 Galvanized

UL File #	E508835

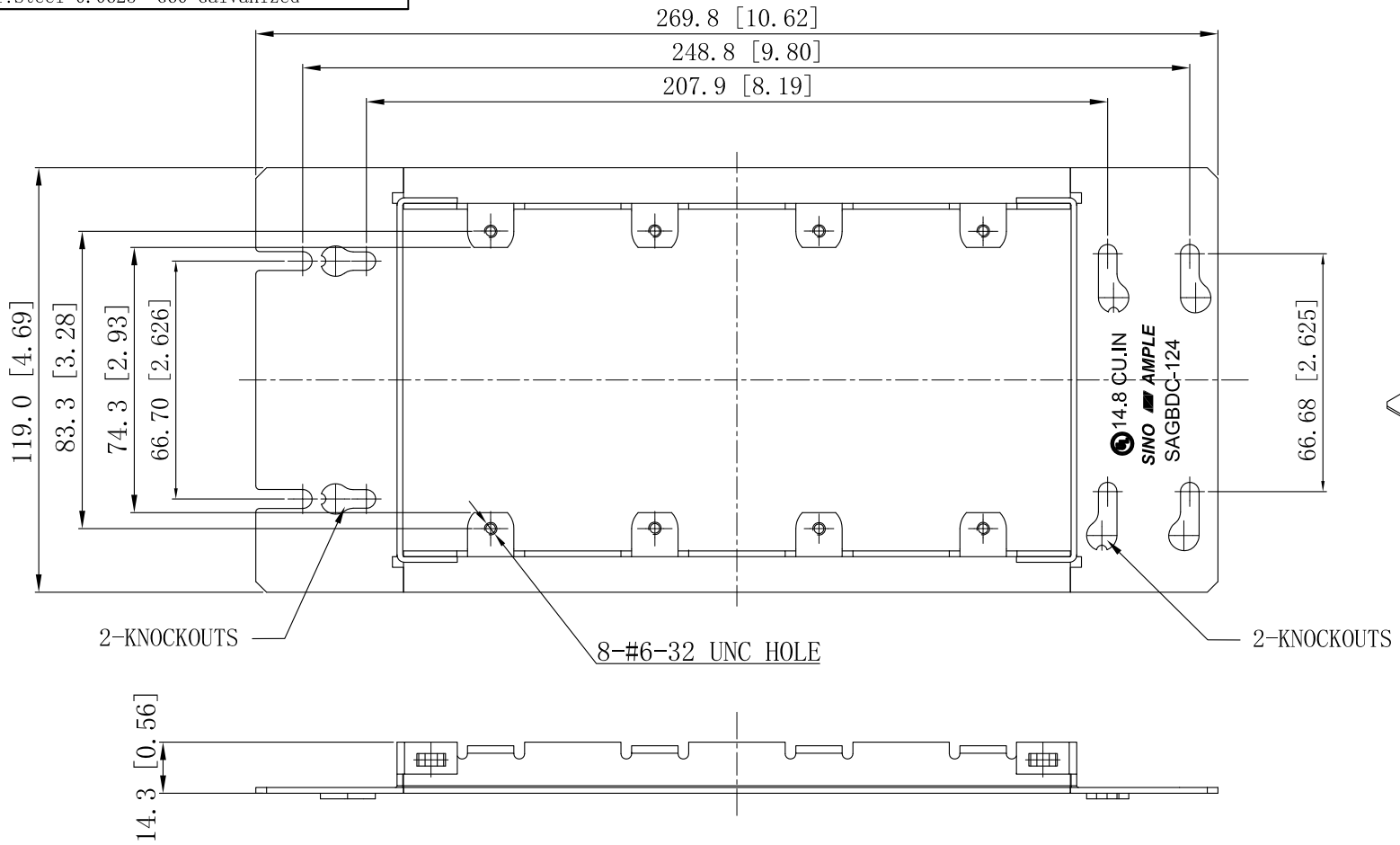

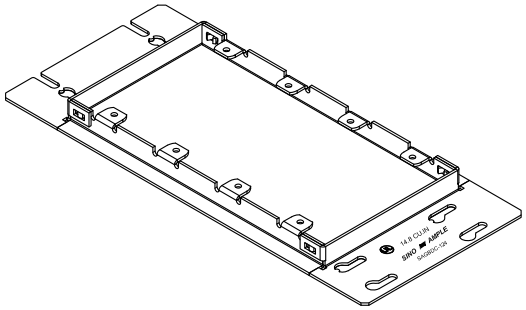

This data sheet is for reference only .SINO AMPLE reserves the right to make changes to the design without prior notice.

DESCRIPTION

TRADE REFERENCE TERMS

STANDARD PACKING	ZHUJI SINO AMPLE METAL PRODUCTS CO.,LTD.		
	TITLE: 1/2″RAISED MULTI-GANG DEVICE COVERS		
10 PCS	SIZE: A4	DWG NO.: SAGBDC-124	REV: A
	DATA SHEET		