SIDES	BOTTOM

6 Pcs 6-32×5/16 screws Pack In Poly-bag Seperately

4 Pcs 6-32 Nut Pack In Poly-bag Seperately

Material:0.051~0.059″-STAINLESS STEEL 316

UL File #	E508835

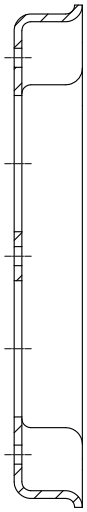

CUTAWAY VIEW A-A

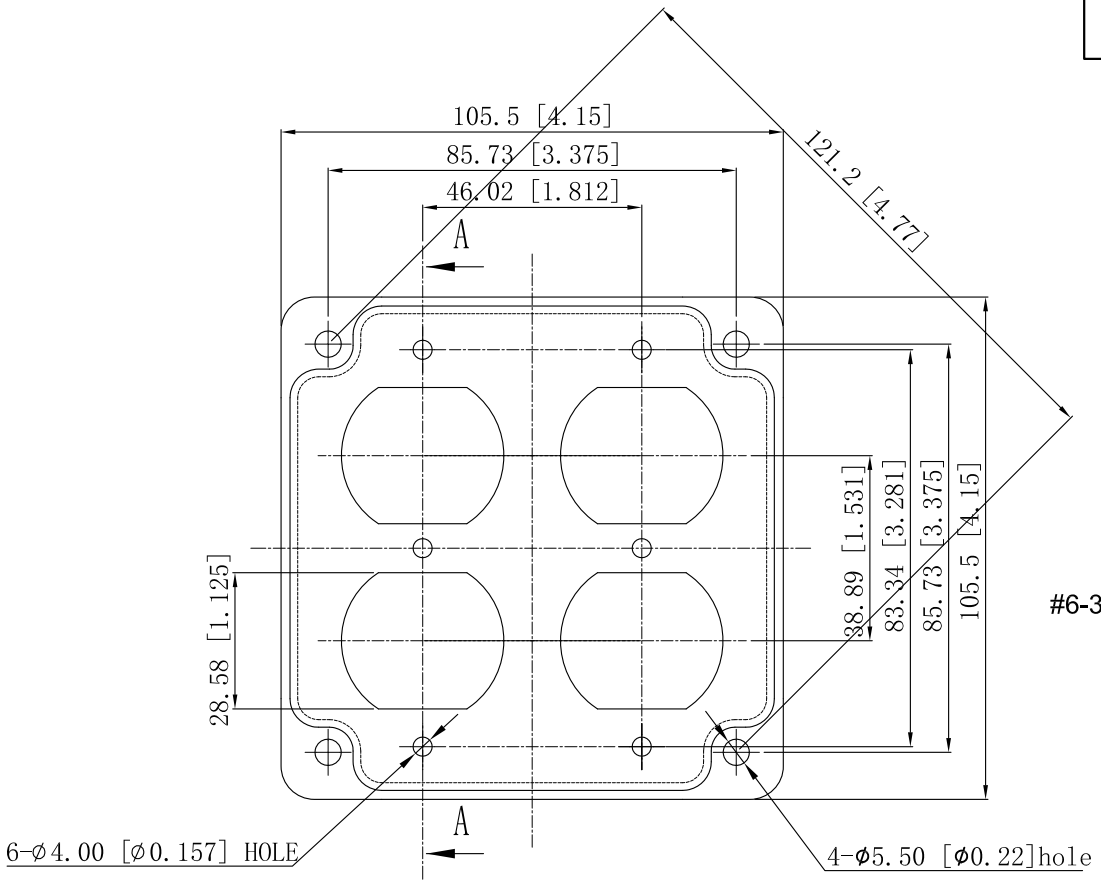

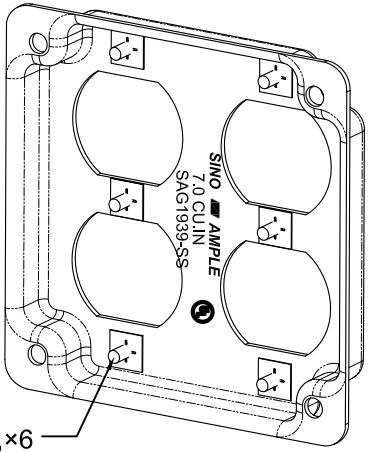

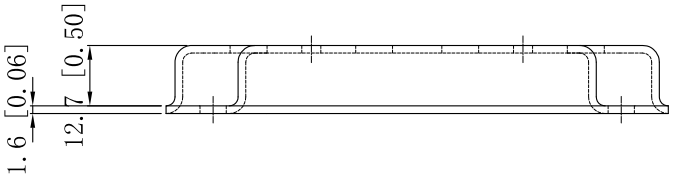

This data sheet is for reference only .SINO AMPLE reserves the right to make changes to the design without prior notice.

DESCRIPTION

TRADE REFERENCE TERMS

STANDARD PACKING	ZHUJI SINO AMPLE METAL PRODUCTS CO.,LTD.		
	TITLE: 4″SQUARE INDUSTRIAL ″GARVIN″ COVERS		
50 PCS	SIZE: A4	DWG NO.: SAG1939-SS	REV: A
	DATA SHEET		