SIDES	BOTTOM
3 1/2″ KNOCKOUTS	
2″ KNOCKOUTS	

Material:Steel-0.0625″-G60 Galvanized
3 PCS #10-32×1 Screws Installed
2 PCS #10-32×1/2 Screws Installed
1 PCS #10-32×3/8 Screws Installed
2 PCS #10-32×3/4 Screws Installed
6 PCS #8-18×1 tapping Screws Installed
2 PCS #10-32 semi-tubular rivets
2 PCS Plastic

UL File #	E508835

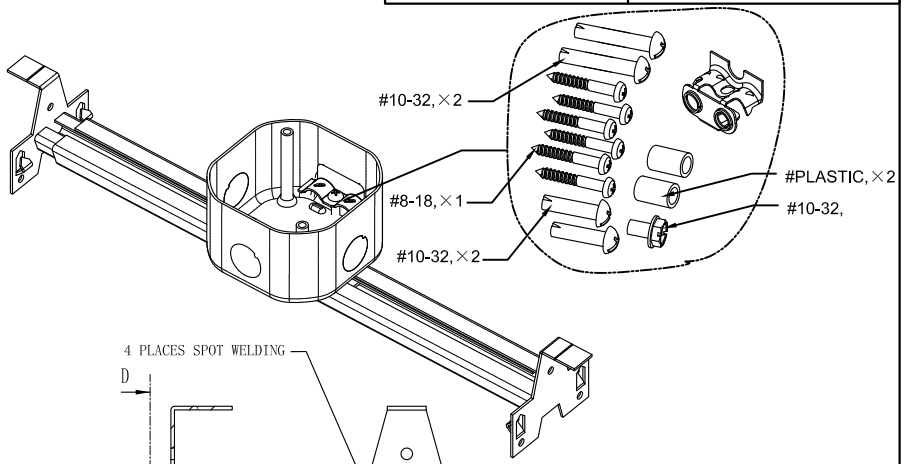

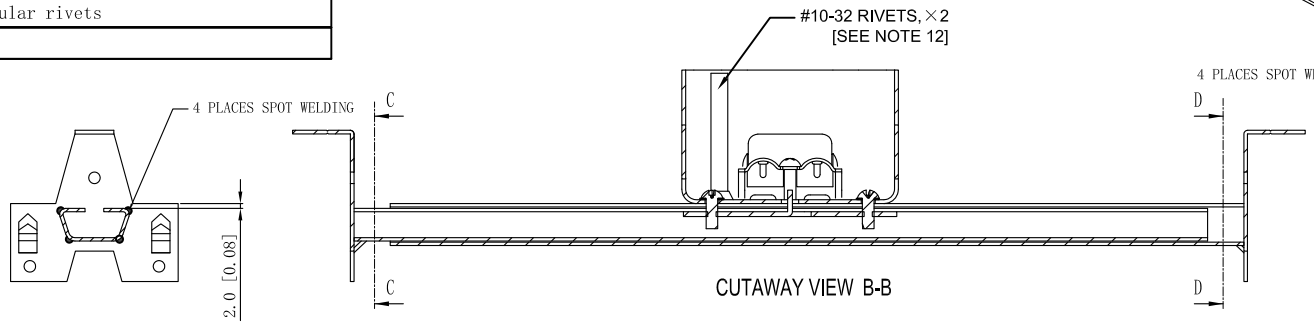

CUTAWAY VIEW D-D

CUTAWAY VIEW B-B

CUTAWAY VIEW C-C

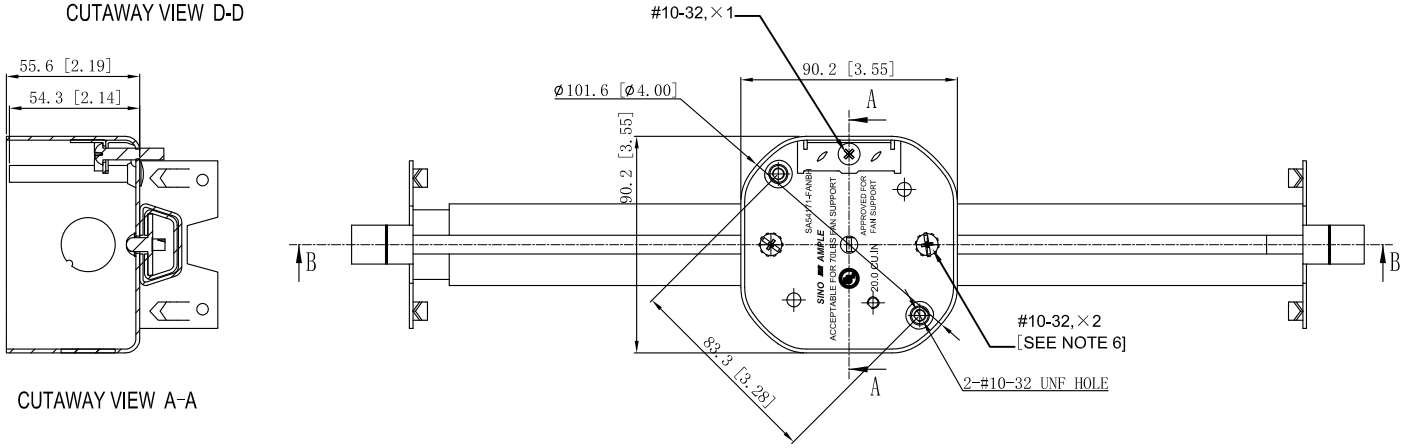

CUTAWAY VIEW A-A

This data sheet is for reference only. SINO AMPLE reserves the right to make changes to the design without prior notice.

DESCRIPTION

TRADE REFERENCE TERMS

STANDARD PACKING	ZHUJI SINO AMPLE METAL PRODUCTS CO.,LTD.		
25 PCS	TITLE: 4″OCTAGON BOXS 2-1/8″DEEP		
	SIZE: A4	DWG NO.: SA54171-FANBH	REV: A
	DATA SHEET		