SIDES	BOTTOM
2 PCS #8-32×1/2 Screws Installed	
4 PCS #10-32×1/2 Screws Installed	
8 PCS #8-32×3/16 Screws Installed	
Material:Steel-0.0625″-G60 Galvanized	

UL File #	E508835

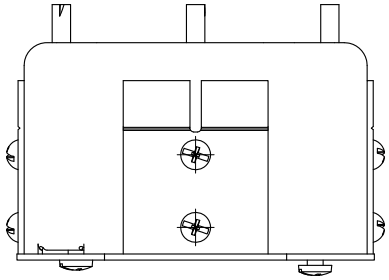

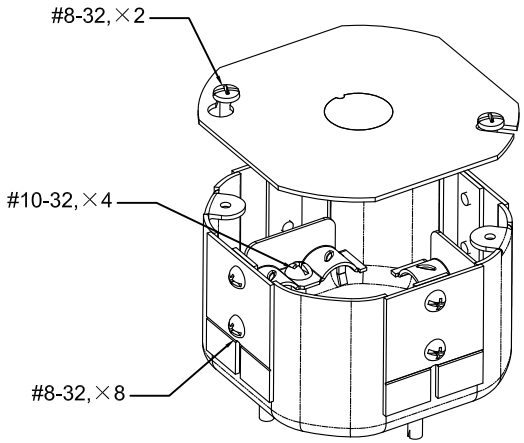

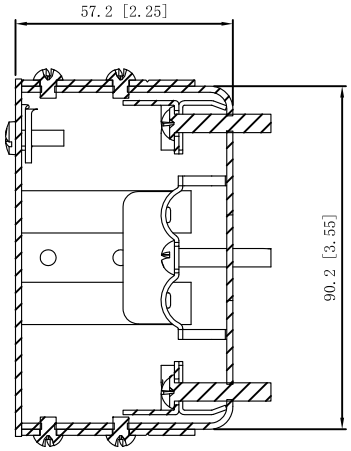

CUTAWAY VIEW A-A

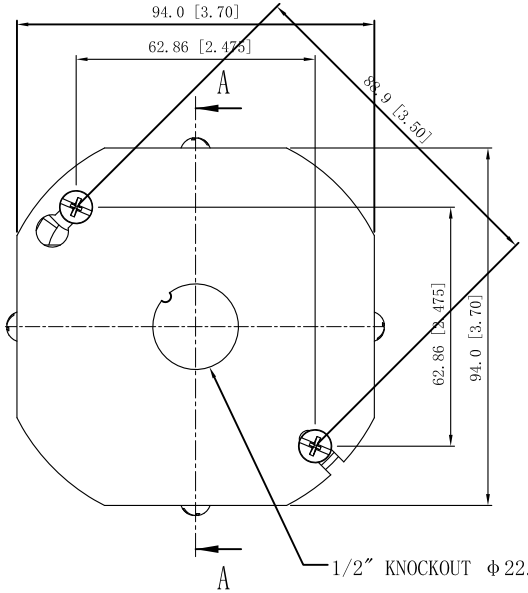

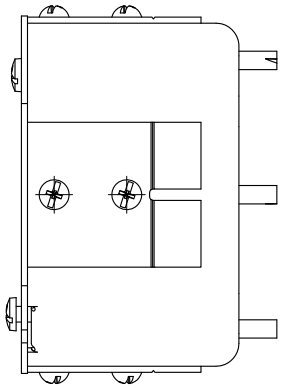

DESCRIPTION

TRADE REFERENCE TERMS

This data sheet is for reference only.SINO AMPLE reserves the right to make changes to the design without prior notice.

STANDARD PACKING	ZHUJI SINO AMPLE METAL PRODUCTS CO.,LTD.		
25 PCS	TITLE: 4″OCTAGON BOXS 2-1/8″DEEP		
	SIZE: A4	DWG NO.: SA54171-OPR	REV: A
	DATA SHEET		