SIDES	BOTTOM

1 PC #1/4-20×1 1/4 Screws Installed

1 PC #1/4-20 Hex Nut Installed

Material:0.047″-Stainless steel 316

UL File #	E510054

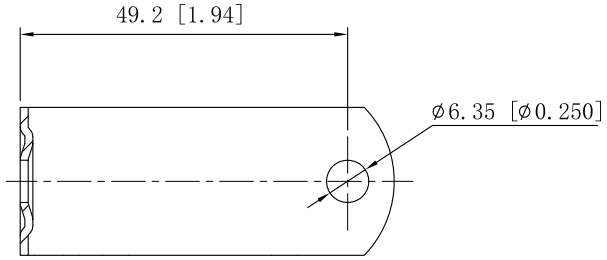

CUTAWAY VIEW A-A

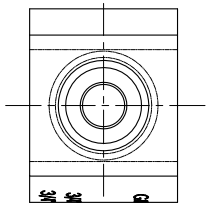

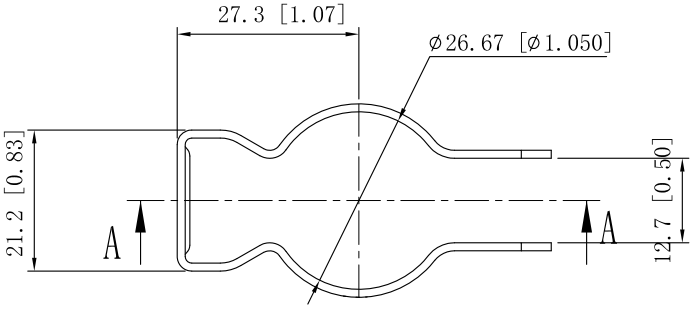

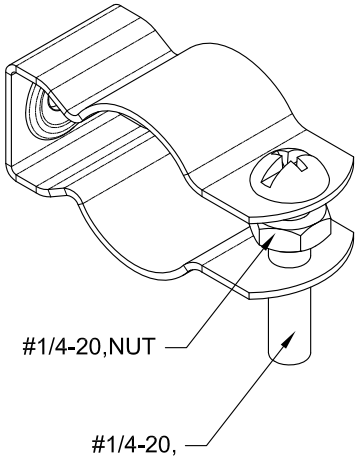

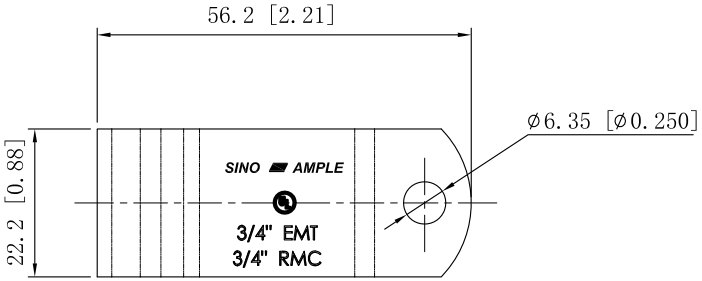

DESCRIPTION

TRADE REFERENCE TERMS

This data sheet is for reference only .SINO AMPLE reserves the right to make changes to the design without prior notice.

STANDARD PACKING	ZHUJI SINO AMPLE METAL PRODUCTS CO.,LTD.		
25 PCS	TITLE: CONDUIT HANGERS		
	SIZE: A4	DWG NO.: SACHSS-75	REV: A
	DATA SHEET		