SIDES	BOTTOM
3 1/2″KNOCKOUTS	5 1/2″KNOCKOUTS
2 PCS 8-32×1/2 Screws Installed	
Material:Steel-0.0625″-G60 Galvanized	

UL File #	E508835

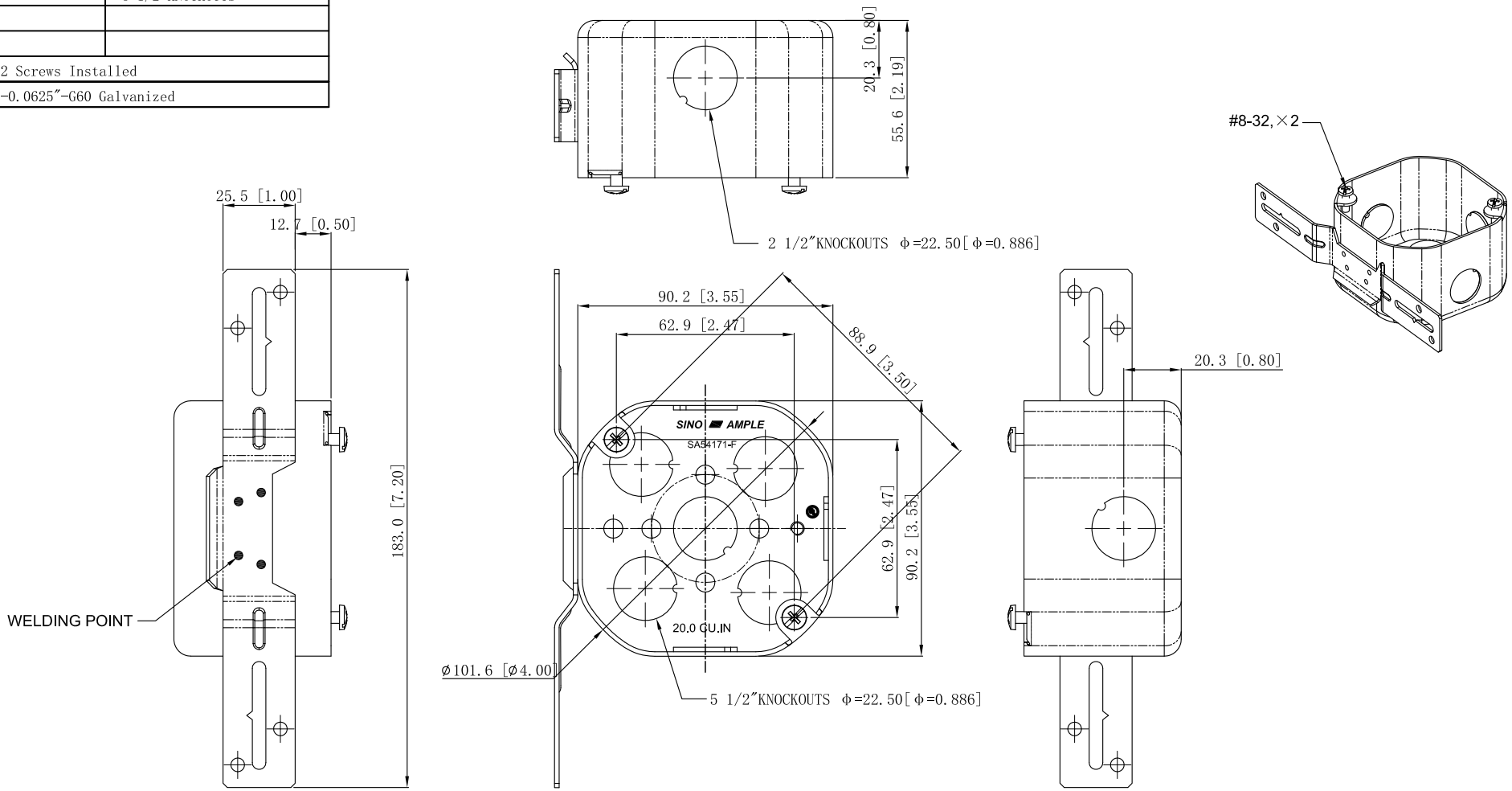

DESCRIPTION

TRADE REFERENCE TERMS

This data sheet is for reference only.SINO AMPLE reserves the right to make changes to the design without prior notice.

STANDARD PACKING	ZHUJI SINO AMPLE METAL PRODUCTS CO.,LTD.		
25 PCS	TITLE: 4″OCTAGON BOXES 2-1/8″DEEP		
	SIZE: A4	DWG NO.: SA54171-F	REV: A
	DATA SHEET		