SIDES	BOTTOM
8 3/4″ KNOCKOUTS	3 1/2″ KNOCKOUTS
	2 3/4″ KNOCKOUTS
2 PCS 8-32×1/2 Screws Installed	
Material:Steel-0.0625″-G60 Galvanized	

UL File #	E508835

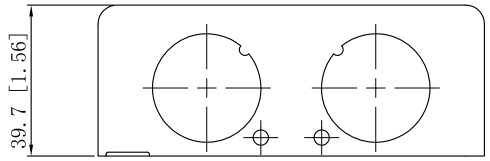

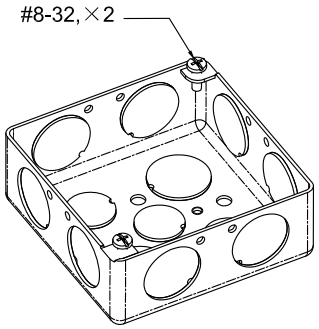

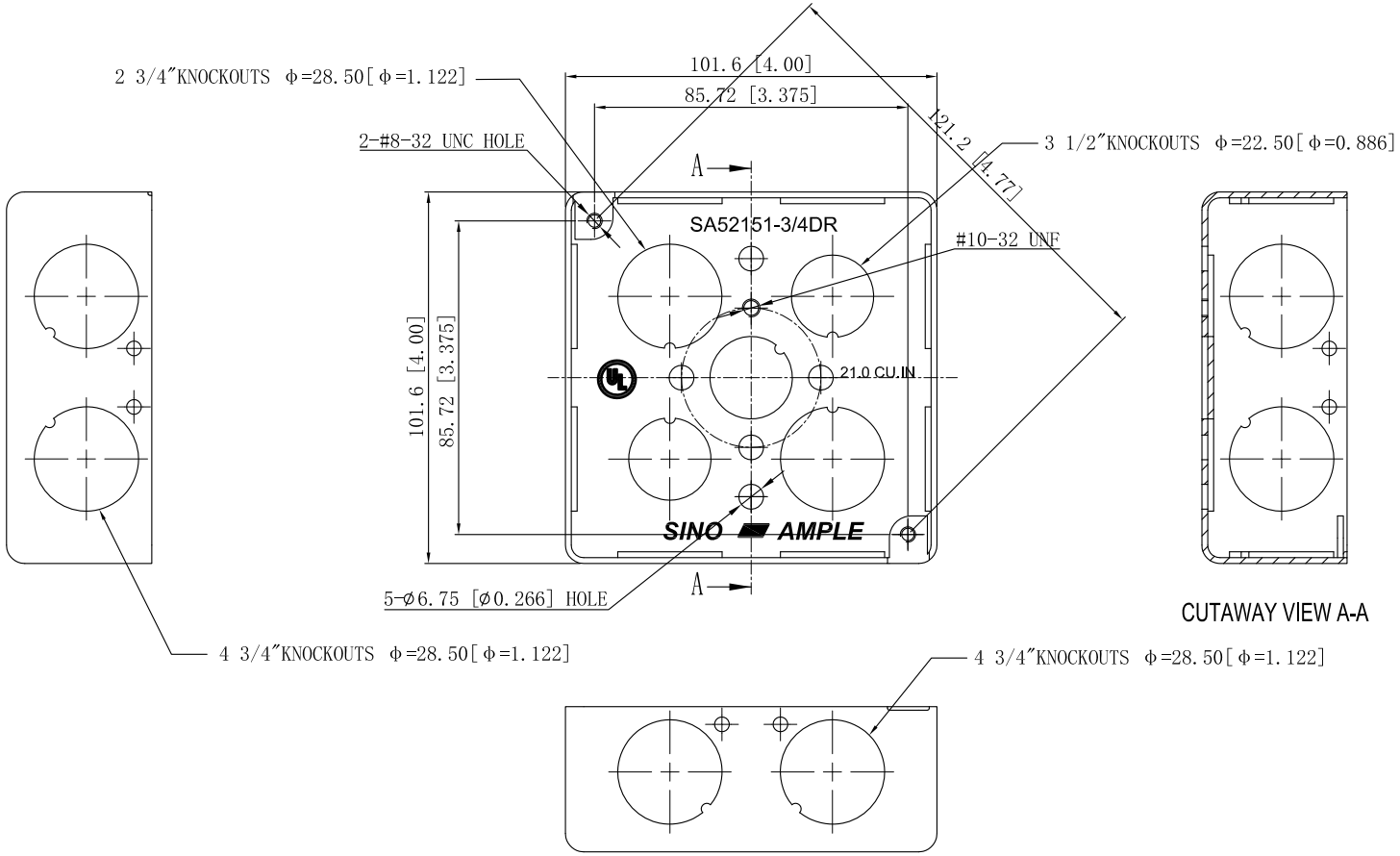

CUTAWAY VIEW A-A

This data sheet is for reference only.SINO AMPLE reserves the right to make changes to the design without prior notice.

DESCRIPTION

TRADE REFERENCE TERMS

STANDARD PACKING	ZHUJI SINO AMPLE METAL PRODUCTS CO.,LTD.		
	TITLE: 4″SQUARE BOXES (1-1/2″DEEP)		
50 PCS	SIZE: A4	DWG NO.: SA52151-3/4DR	REV: A
	DATA SHEET		